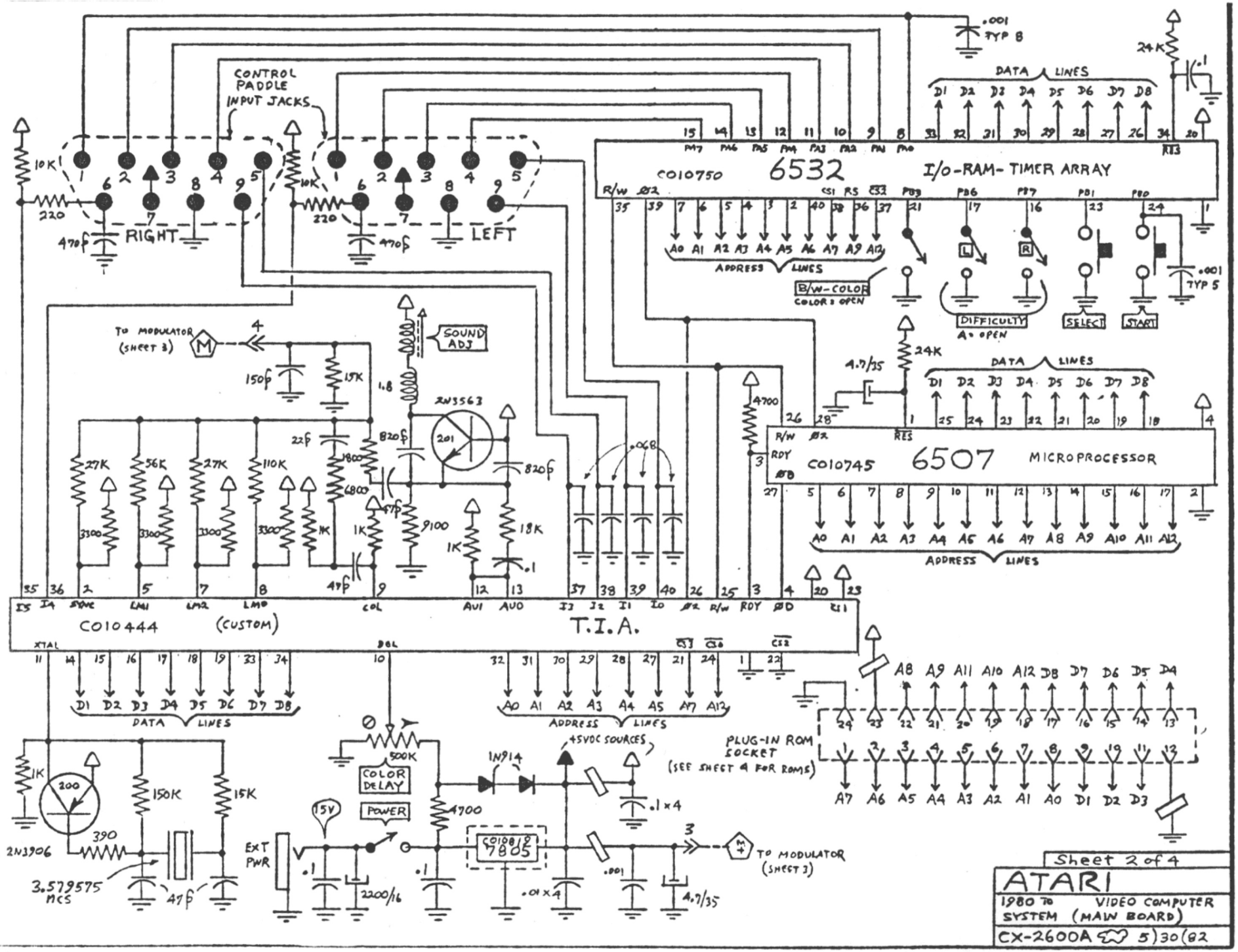
CONTROL PADDLE INPUT JACKS
RIGHT
LEFT
C010750
6532
I/O-RAM-TIMER ARRAY
DATA LINES
ADDRESS LINES
B/W-COLOR
COLOR = OPEN
DIFFICULTY
A = OPEN
SELECT
START
TO MODULATOR (SHEET 3)
SOUND ADJ
2N3563
C010745
6507
MICROPROCESSOR
C010444
(CUSTOM)
T.I.A.
COLOR DELAY
POWER
EXT PWR
1N914
+5VDC SOURCES
C010819
7805
PLUG-IN ROM SOCKET
(SEE SHEET 4 FOR ROMS)
2N3906
3.579575 MCS
Sheet 2 of 4
ATARI
1980 TO VIDEO COMPUTER SYSTEM (MAIN BOARD)
CX-2600A 5)30(82