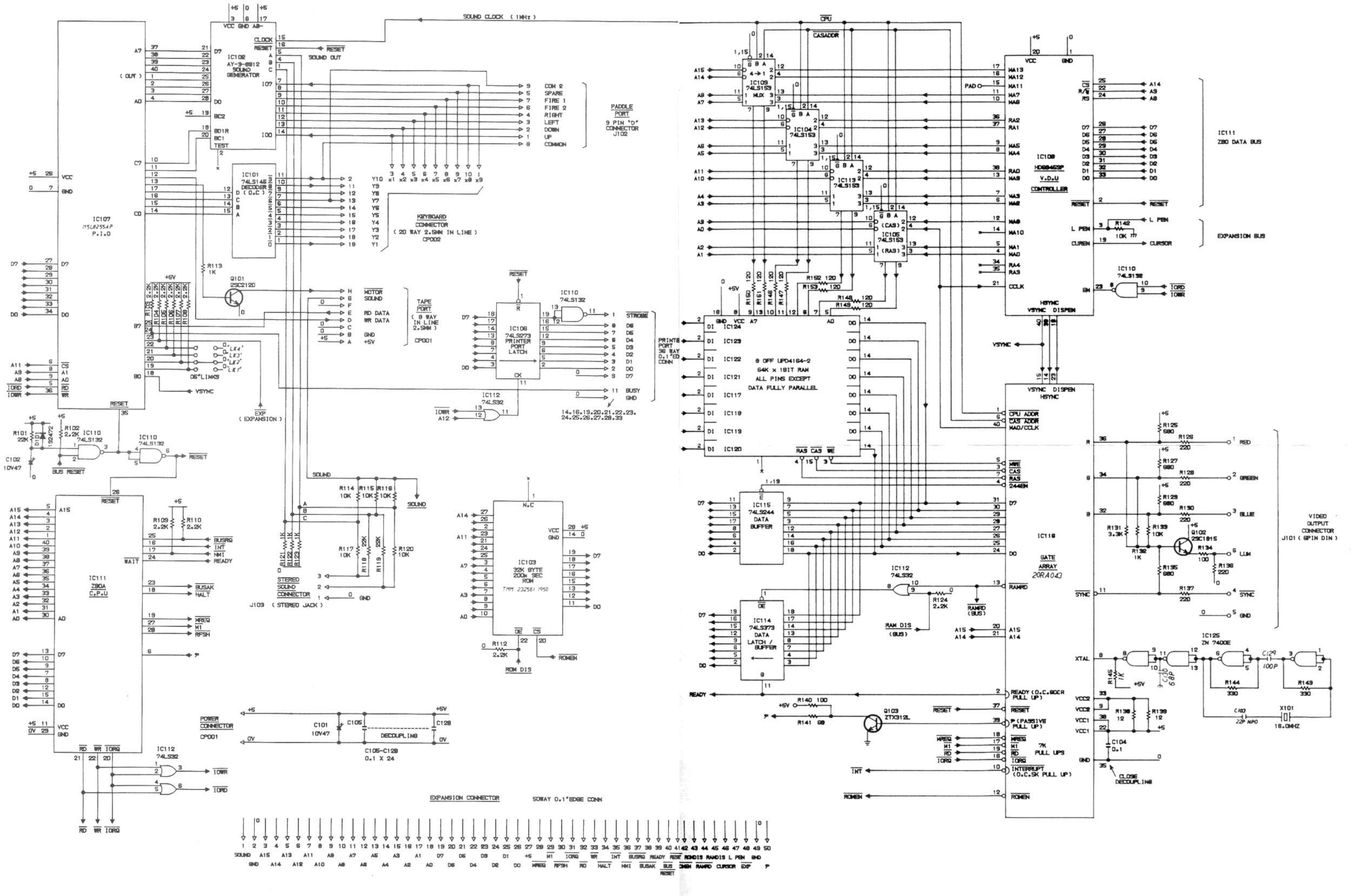

SOUND CLOCK (1MHz)
IC102 AY-3-8912 SOUND GENERATOR
IC101 74LS145 DECODER (O.C)
IC107 M5L8255AP P.I.O
PADDLE PORT 9 PIN "D" CONNECTOR J102
KEYBOARD CONNECTOR (20 WAY 2.5MM IN LINE) CP002
TAPE PORT (8 WAY IN LINE 2.5MM) CP001
IC106 74LS273 PRINTER PORT LATCH
IC110 74LS132
IC112 74LS32
PRINTER PORT 36 WAY 0.1"ED CONN
IC111 Z80A C.P.U
IC103 32K BYTE 200m SEC ROM
STERED SOUND CONNECTOR J103 (STEREO JACK)
POWER CONNECTOR CP001
C101 10V47
C105-C128 0.1 X 24
DECOUPLING
EXPANSION CONNECTOR
50WAY 0.1"EDGE CONN
IC109 74LS153 MUX
IC104 74LS153
IC113 74LS153
IC105 74LS153
IC108 HD68465P V.D.U CONTROLLER
IC111 Z80 DATA BUS
EXPANSION BUS
8 OFF UPD4164-2 64K x 1BIT RAM ALL PINS EXCEPT DATA FULLY PARALLEL
IC115 74LS244 DATA BUFFER
IC114 74LS373 DATA LATCH / BUFFER
IC116 GATE ARRAY 20RA043
IC125 ZN 7400E
VIDEO OUTPUT CONNECTOR J101 (6PIN DIN)
7K PULL UPS
CLOSE DECOUPLING